www.santos.fr

DOUGH MIXER
10 LITERS #18
(10 quart kneader - 4kg of dough)

ROBINEX
BEDRIJFSKEUKENS
H.L.Breenkade 1, 2465 AL Rijnsaterwoude
Tel: 0172-500280 e-mail: info@robinex.nl
www.robinex.nl

Internationally patented models

handmade IN FRANCE

CE

RoHS COMPLIANT 2002/95/EC

DOUGH MIXER #18

POWERFUL / EFFICIENT / DURABLE

Ideal to knead 4 kg (9 lbs) of hard dough within approximately 15 minutes.
Operates like a baker's dough mixer.
Ideal for all kinds of breads and pizzas.

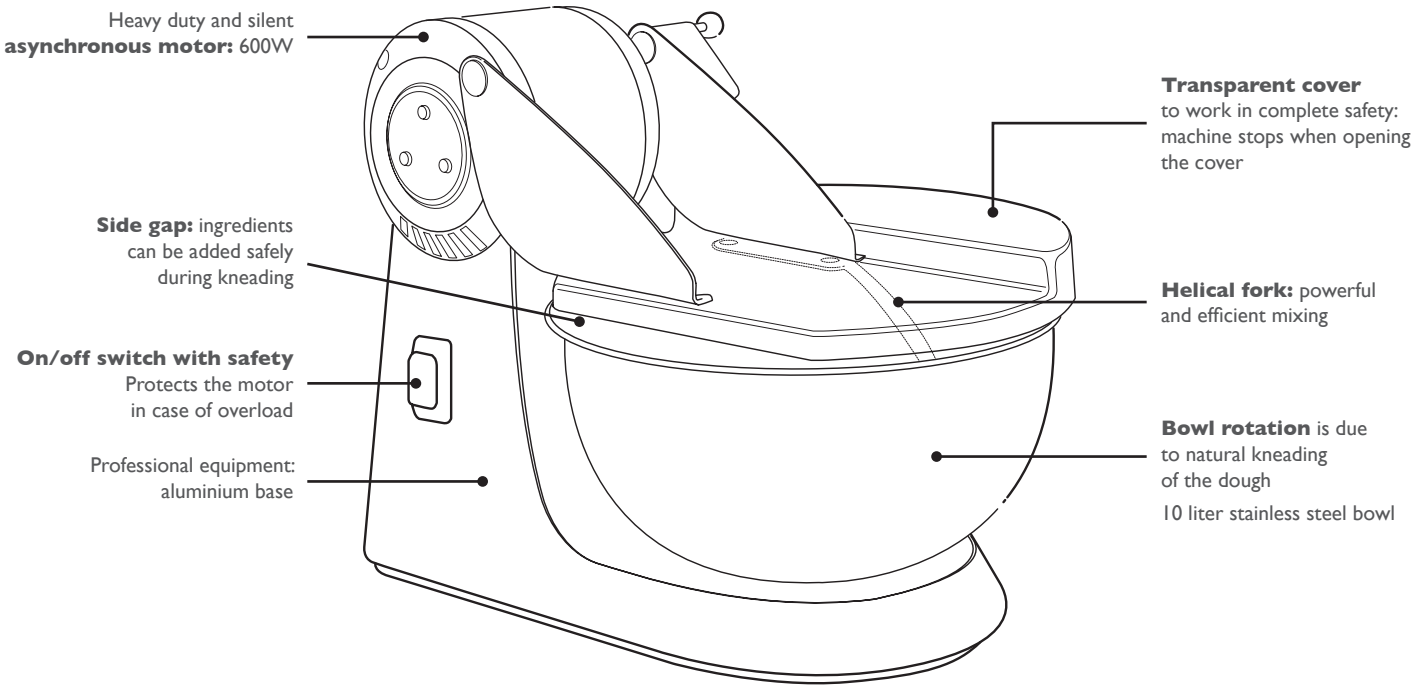

EASY TO USE

10 LITER STAINLESS STEEL BOWL

EASY TO DISASSEMBLE FOR CLEANING

www.santos.fr

Your partner in food preparation since 1954
A complete range of products for all needs: catering, fast-food, institutions, snack shops, creative cooking, pastries… *Unleash your creativity!*

This appliance has no accessories

TECHNICAL SPECIFICATIONS

Motor

Single phase: 100 - 120 V - 50/60 Hz - 650 W - CE
220 - 240 V - 50/60 Hz - 600 W - CE

Speed: 1500 rpm (50 Hz)
1800 rpm (60 Hz)

Fork speed: 70 rpm (50 Hz)
84 rpm (60 Hz)

Weight

Net: 18 kg (40 lbs)
Shipping: 20 kg (44 lbs)

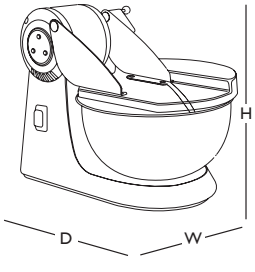

APPLIANCE
W: 350 mm (15")
D: 500 mm (20")
H: 420 mm (17")

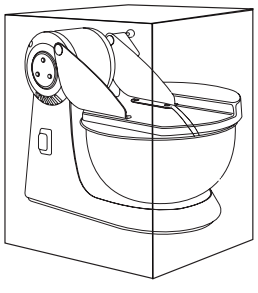

SHIPPING BOX
W: 390 mm (15,4")
D: 590 mm (23,2")
H: 460 mm (18")

SAFETY, STANDARD, HYGIENE

In accordance with the following regulations:
- Machinery directive 2006/42/EC
- Electromagnetic compatibility 2004/108/EC
- "Low voltage" directive 2006/95/EC
- Regulation 1935/2004/EC (contact with food)
- RoHS directive 2002/95/EC

Harmonized European Standards
EN 12100 - 1 & 2: 2004
EN 60204-1: 2006
EN 60335-2-64: 2004 Commercial electrical kitchen machines

CE (European standards)

Thermal safety
Motor protected by internal thermal detector.

Acoustic safety
Very silent and powerful asynchronous motor.

Hygiene
All removable parts can be put in a dishwasher or easily cleaned with hot soapy water.